Chapter 17

A NEW FEATURE-BASED METHOD FOR SOURCE CAMERA IDENTIFICATION

Fanjie Meng, Xiangwei Kong and Xingang You

Abstract The identification of image acquisition sources is an important problem in digital image forensics. This paper introduces a new feature-based method for digital camera identification. The method, which is based on an analysis of the imaging pipeline and digital camera processing operations, employs bi-coherence and wavelet coefficient features extracted from digital images. The sequential forward feature selection algorithm is used to select features, and a support vector machine is used as the classifier for source camera identification. Experiments indicate that the source camera identification method based on bi-coherence and wavelet coefficient features is both efficient and reliable.

Keywords: Source camera identification, bi-coherence, wavelet coefficients

1. Introduction

The improving performance and the falling cost of digital cameras have led to their widespread use. Compared with their analog counterparts, digital cameras provide photographers with immediate visual feedback and the pictures can be shared conveniently by electronic means. Because of these advantages, the general public as well as law enforcement agencies are rapidly replacing analog cameras with digital versions [14]. On the other hand, it is easy even for amateurs to manipulate the content of digital images without leaving any obvious traces. Thus, a digital image may not be an accurate record of reality and its authenticity can be questioned, especially in legal proceedings [15]. Reliable techniques for identifying digital cameras are, therefore, important to establishing the origin of images presented as evidence.

The simplest method for source camera identification is to inspect the header file of an image. The EXIF header of an image, for example,

Please use the following format when citing this chapter:

Meng, F., Kong, X. and You, X., 2008, in IFIP International Federation for Information Processing, Volume 285; *Advances in Digital Forensics IV*; Indrajit Ray, Sujeet Shenoi; (Boston: Springer), pp. 207–218.

provides information about the camera make and model, and details about image capture (e.g., exposure and time). However, this method has limited credibility because header data is easily modified and may not be available after the image is recompressed or saved in a new format.

Source cameras can also be identified based on digital watermarks. Some cameras (e.g., Kodak DC290) embed visible watermarks while others (e.g., Epson PhotoPC 700/750Z) embed invisible watermarks. However, the use of watermarks for camera identification is limited to special situations (e.g., "secure digital cameras" [3]). In any case, few digital cameras embed watermarks in their images, so watermark-based identification is not a general solution to the source camera problem.

Several researchers have investigated passive methods such as identification based on camera pixel defects. Geradts, *et al.* [12] note that manufacturing defects in CCD sensor arrays can be used to construct unique patterns for digital cameras. However, this approach fails when strong light is incident on a CCD array, when there are not enough dark frames, or when there is camera movement.

CCD noise is another camera characteristic that can be used in passive identification. Operating under the assumption that CCD noise is unique to cameras, Lukas and co-workers [17–19] have developed an identification method that uses photo-response non-uniformity (PRNU) noise caused by pixel non-uniformities. In their approach, the noise component of images is extracted using a wavelet-based denoising filter and the denoising residual from several sample images is averaged to produce a PRNU pattern that represents the camera signature. This signature acts as a high frequency spread spectrum watermark whose presence in the image is established using a correlation detector. While the method is robust to JPEG compression, the authors note that geometrical operations and noise attacks may prevent correct camera classification [19].

Kharrazi, *et al.* [15] have proposed a feature-based technique in which a classifier is used to identify the source camera based on pattern recognition principles. The feature vector used for classification contains image color characteristics, image quality metrics and the mean of wavelet coefficients. Although the method has been shown to achieve nearly 92% average classification accuracy for six different cameras, it fails to identify cameras of the same make but different models (these experimental results are presented later in this paper).

Choi and co-workers [5, 6] have augmented the feature-based approach by incorporating the lens radial distortion coefficients of digital cameras. The classification accuracy is improved. However, it is necessary to extract distorted line segments in Devernay's straight line method [7] in

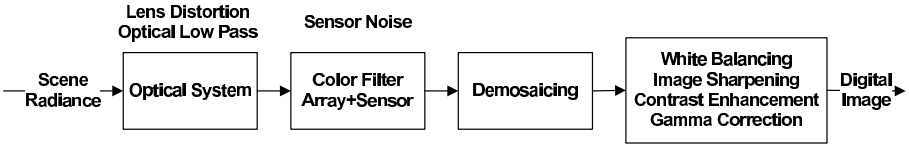

Figure 1. Imaging pipeline.

order to estimate the distortion coefficients. Thus, the image samples are limited to those containing distorted line segments.

This paper proposes a new passive feature-based method for source camera identification. It considers the influence of non-linear distortions caused by the imaging pipeline on higher-order image statistics and the impact of image processing operations on the wavelet domain. The method uses bi-coherence and wavelet coefficient statistics as distinguishing features and a support vector machine (SVM) as the classifier for source camera identification. Experimental results demonstrate that the method is both efficient and reliable. Also, it has better accuracy than the methods of Kharrazi, *et al.* [15] and Choi, *et al.* [5, 6] without placing constraints on the sample images.

2. Imaging Pipeline

The imaging pipeline of a digital camera is presented in Figure 1 [22].

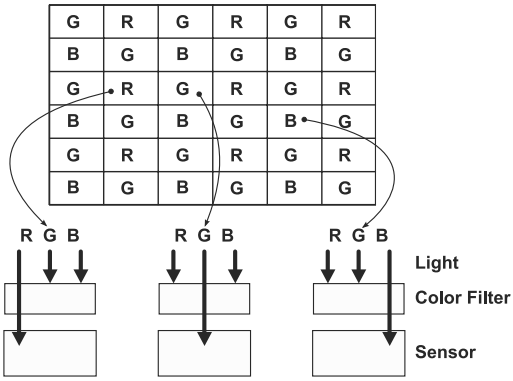

Figure 2. Color filter array.

Light entering the camera through the lens is captured by a sensor (usually a CCD detector). Most cameras employ one CCD detector at each pixel; however, each pixel has a different RGB color filter based on the color filter array (CFA) used by the camera (Figure 2). The indi-

vidual color planes are then filled by interpolation using a process called "demosaicing." Following this, several operations are performed, including color processing, enhancement, gamma correction and compression. Finally, the digital image is stored in memory in a user-defined format (e.g., RAW, TIFF or JPEG).

Differences in the image capture and processing operations of camera models produce distinguishing features in digital images. We attempt to quantify these image features using statistical techniques and use the results for source camera identification.

3. Identification Based on Image Features

In order to identify the source camera of a particular digital image, it is necessary to extract statistical features that can be used to discriminate between cameras. Kharrazi, *et al.* [15] use image color statistics to quantify the impact of interpolation and color processing. They also use image quality metrics to quantify differences arising from image processing operations.

Most cameras also introduce certain geometric and luminance non-linearities (e.g., due to lens distortion and gamma correction). These non-linearities introduce higher-order correlations in the frequency domain, which can be detected using polyspectral analysis tools [10]. Farid and colleagues [9–11] have used bi-coherence statistics to estimate geometric and luminance non-linearities and to calibrate digital images. We employ polyspectral analysis and higher-order statistics as discriminating features primarily because of their sensitivity to the non-linear distortions produced by digital cameras.

Digital images can be represented in additional detail using features in a transformation domain. For example, photographic images have been modeled using multiscale wavelet decomposition. Image capture and image processing operations in digital cameras have different influences on the regularities that are inherent to natural scenes; these differences can be captured using first- and higher-order statistics of wavelet coefficients. Our use of wavelet coefficient statistics is motivated by their effectiveness in steganalysis [20] and image origin identification [21].

3.1 Feature Extraction

Our identification method uses the magnitude and phase statistics of bi-coherence along with wavelet coefficient statistics to capture the unique non-linear distortions in images produced by different cameras. This section discusses the methods used to extract these statistical features.

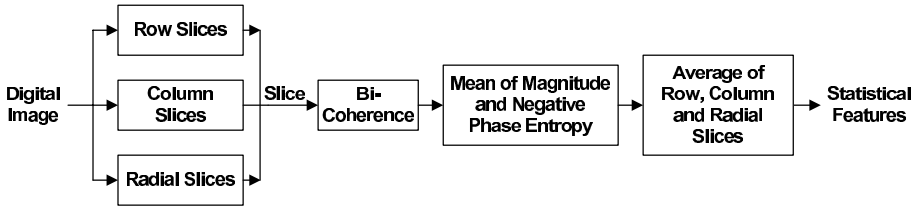

Figure 3. Extraction of bi-coherence features.

3.1.1 Bi-Coherence Features. Non-linear distortions produced by digital cameras are characterized using statistical features of image bi-coherence. Consider, for example, a one-dimensional signal $f(x)$. The bi-spectrum of the signal is estimated by dividing the signal into N (possibly overlapping) segments, computing the Fourier transform of each segment, and averaging the individual estimates. This is given by:

$$\widehat{B}(\omega_1, \omega_2) = \frac{1}{N} \sum_{k=1}^{N} F_k(\omega_1) F_k(\omega_2) F_k^*(\omega_1 + \omega_2) \tag{1}$$

where $F_k(\cdot)$ is the Fourier transform of the kth segment. In order to make the variance at each bi-frequency (ω_1, ω_2) independent of $P(\omega_1)$, $P(\omega_2)$ and $P(\omega_1 + \omega_2)$, we employ the bi-coherence (i.e., normalized bi-spectrum) [16]:

$$\begin{aligned} \widehat{b}(\omega_1 + \omega_2) &= \frac{\frac{1}{N}\sum_k F_k(\omega_1) F_k(\omega_2) F_k^*(\omega_1 + \omega_2)}{\sqrt{\frac{1}{N}\sum_k |F_k(\omega_1) F_k(\omega_2)|^2 \frac{1}{N}\sum_k |F_k(\omega_1 + \omega_2|^2)}} \\ &= |\widehat{b}(\omega_1 + \omega_2)| e^{j\phi(\widehat{b}(\omega_1 + \omega_2))}. \end{aligned} \tag{2}$$

Next, we compute the mean of the magnitude and the negative phase entropy [23] of the bi-coherence as statistic features.

The extraction of bi-coherence features is illustrated in Figure 3. To reduce memory and the computational overhead involved in calculating the full four-dimensional bi-coherence of images, we restrict our analysis to one-dimensional row, column and radial slices through the center of images. For each slice, we use segments of 64 pixels in length with an overlap of 32 pixels with adjacent segments. To reduce the frequency leakage and obtain better frequency resolution, each segment is multiplied with a Hamming window and padded with zeros from the end before computing the 128-point discrete Fourier transform. Then, the

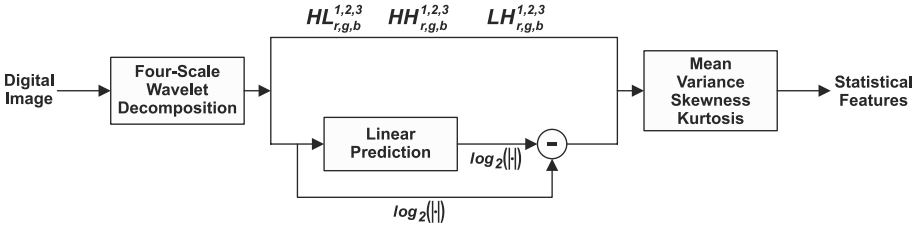

Figure 4. Extraction of wavelet coefficient features.

estimates of bi-coherence statistics (mean of the magnitude and negative phase entropy) for a slice are calculated. The statistics for the entire image are computed by averaging the estimates for a subset of row, column and radial slices for each RGB color component.

Note that it is not necessary to extract the information associated with image content (e.g., line segments) when applying bi-coherence statistics to quantify the non-linear distortions produced by cameras. Therefore, no rigorous constraint is placed on image sample selection.

3.1.2 Wavelet Coefficient Features. Wavelet coefficients are used to characterize the impact of image processing on digital camera images. Four-scale wavelet decomposition is employed (Figure 4). This splits the frequency space into four scales and the orientations (HH, HL, LH). Next, four statistics (mean, variance, skewness and kurtosis) of the sub-band coefficients and the linear prediction errors at each orientation, scale and color channel are computed. These statistics form the second group of statistical feature vectors used for source camera identification.

Note that the method of Kharrazi, *et al.* [15] uses only the first-order statistic (mean) of the sub-band coefficients; also, it does consider linear prediction errors. Therefore, the prediction of wavelet coefficients can be regarded as a filtering operation in the wavelet domain and the prediction errors are basically independent of image content. As a result, the dependence between the prediction error features and image content is lower, producing more stable performance for arbitrary image samples.

3.2 Source Camera Identification Framework

The sequential forward feature selection algorithm [24] is used to reduce the correlation among features and improve the accuracy of source camera identification. The algorithm provides reliable results with reasonable computational cost.

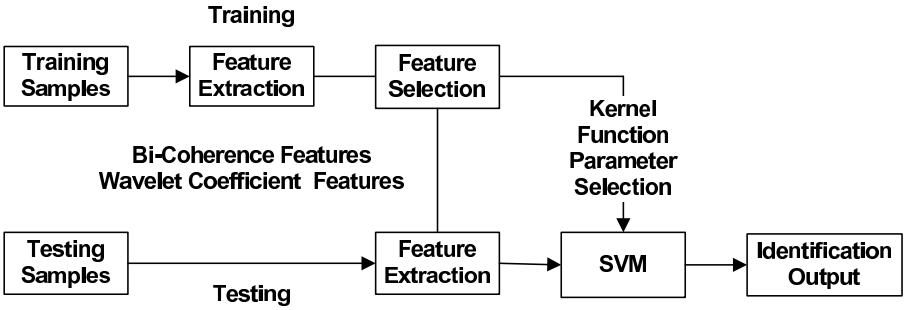

Figure 5. Source camera identification framework.

The algorithm analyzes all the features and constructs the most significant feature set by adding or removing features until no further improvement is obtained. The steps in the algorithm are as follows:

1. Initialize the current feature vector with the pair of features that produce the best classification results.

2. Add the most significant feature from the remaining features to the current feature set.

3. Remove the least significant feature from the current feature set. (The least significant feature is the feature whose removal improves the classification result the most.)

4. Check if the removal of the feature improves the classification result. If the classification result is improved, remove the feature and return to Step 3. Otherwise, do not remove the feature and return to Step 2.

A support vector machine (SVM) is used as the classifier. In our experiments, we used the SVM implementation provided by the LIBSVM toolbox [4].

The source camera identification framework is shown in Figure 5. First, the bi-coherence and wavelet coefficient features are extracted from the training samples for use in feature selection and classifier design. When using SVM classification, a certain amount of pre-processing of the feature data can increase the accuracy of classification; in our scheme, this is accomplished by linearly scaling feature values to the range [0,1].

Our experiments used C-support vector classification with the nonlinear RBF kernel and the tunable parameters, C and γ. The two parameters are obtained by performing a grid search using v-fold cross validation [13]. In the cross validation procedure, all the training samples are randomly divided into v subsets of equal size. Each subset is

Table 1. Camera and sample image properties.

Camera	Camera Parameters		Sample Image Parms.	
	Sensor	**Max. Resolution**	**Image Resolution**	**Image Format**
Kodak DC290	Unspecified CCD	2240 × 1500	2240 × 1500	JPEG
Nikon 5700	2/3-inch CCD	2560 × 1920	1600 × 1200	JPEG
Sony DSC-F828	2/3-inch CCD	3264 × 2448	1280 × 960	JPEG
Canon Pro1	2/3-inch CCD	3264 × 2448	1600 × 1200	JPEG
Canon G2	1/1.8-inch CCD	2272 × 1704	2272 × 1704 1600 × 1200 1024 × 768	JPEG
Canon G3	1/1.8-inch CCD	2272 × 1704	2272 × 1704	JPEG

tested using the classifier trained with the remaining $\upsilon - 1$ subsets. Thus, every sample in the entire training set is predicted once so that the cross validation accuracy is the percentage of data that is correctly classified. In our experiments, a 5-fold cross validation was performed for each (C, γ) pair with values in the set $\{2^{-5}, 2^{-4}, \ldots, 2^{5}\}$. The parameter value pair with the highest cross validation accuracy was selected.

4. Experimental Setup and Results

This section describes the experimental setup for testing the source camera identification method and the results that were obtained.

4.1 Experimental Setup

Six different cameras were used in the experiments (Table 1). Three resolutions were used for the Canon G2 images in order to eliminate the influence of the properties of the sample images on the experimental results. The JPEG format was used for all the images because of its popularity and concerns about degradation in image quality caused by image compression in other formats. Furthermore, upon estimating the JPEG tables of all the image samples, no regularities were found within every class; this implies that JPEG compression has no impact on the experimental results.

A total of 2,100 image samples were used (350 images for each camera). The images were captured using the auto-focus mode and stored in the JPEG format. The images were typical shots varying from nature scenes to close-ups of people. The training set contained 1,200 images and the classifier was tested using the remaining 900 images. Images were randomly assigned to the training and testing sets. Camera identi-

Table 2. Experimental results.

Camera	Kodak	Nikon	Sony	Canon Pro1	Canon G2	Canon G3	Accy.
Kodak	**150**	0	0	0	0	0	100%
Nikon	0	**148**	0	2	0	0	98.7%
Sony	0	2	**148**	0	0	0	98.7%
Canon Pro1	0	1	1	**148**	0	1	98.7%
Canon G2	0	0	0	5	**139**	6	92.7%
Canon G3	0	0	0	0	2	**148**	98.7%

fication features were extracted for all the images and fed to a support vector machine for training and testing.

4.2 Experimental Results

Table 2 presents the results obtained after computing the image features and applying the feature selection method discussed in Section 3.2. The confusion matrix shows that the average identification accuracy for all the cameras exceeds 97% and that for the three Canon cameras is at least 96%. Note that the Canon G2 camera has the lowest identification accuracy, most likely because its images had three resolutions; using multiple resolutions negatively affects classifier training and, consequently, the accuracy of identification.

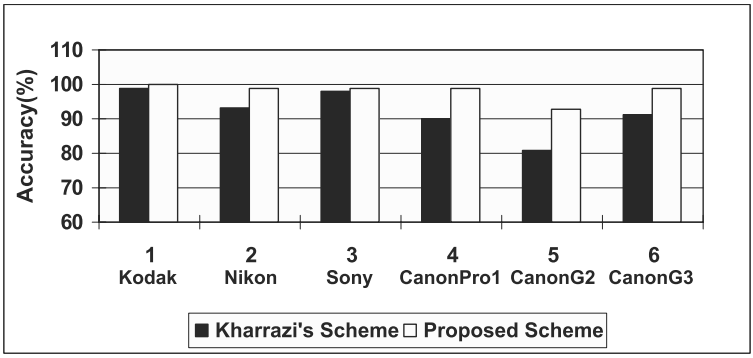

Figure 6. Comparison of results.

Figure 6 compares the results obtained using our method with those obtained using the method of Kharrazi, *et al.* [15] for the same image samples. Note that the average accuracy obtained with Kharrazi's method is 92%, but the accuracy for the Canon G2 camera is only about

80%. We can, therefore, conclude that bi-coherence and wavelet domain statistical features improve the identification accuracy, especially for cameras of the same brand but different models.

5. Conclusions

The source camera identification method, which engages statistical characteristics of bi-coherence and wavelet coefficients as distinguishing features, the sequential forward feature selection algorithm for feature selection and a support vector machine for classification, is both efficient and reliable. The accuracy of identification is also much better than that obtained using the method of Kharrazi, *et al.* [15], especially for cameras of the same brand but different models. Furthermore, no constraints are imposed on image samples as in the case of the method proposed by Choi, *et al.* [5, 6].

Our future research will attempt to enhance the identification method by incorporating features from other techniques (e.g., PRNU [19], which is more effective at distinguishing between cameras of the same model but less robust for geometrical transformations). We will also attempt to expand the feature vector to accommodate camera images of varying content and texture.

Acknowledgements

This research was supported by Grant No. 60572111 from the National Science Foundation of China.

References

[1] I. Avcibas, *Image Quality Statistics and Their Use in Steganalysis and Compression*, Ph.D. Dissertation, Department of Electrical and Electronics Engineering, Bogazici University, Istanbul, Turkey, 2001.

[2] I. Avcibas, N. Memon and B. Sankur, Steganalysis using image quality metrics, *IEEE Transactions on Image Processing*, vol. 12(2), pp. 221–229, 2003.

[3] P. Blythe and J. Fridrich, Secure digital camera, *Proceedings of the Fourth Digital Forensic Research Workshop*, 2004.

[4] C. Chang and C. Lin, LIBSVM: A Library for Support Vector Machines (www.csie.ntu.edu.tw/∼cjlin/libsvm).

[5] K. Choi, E. Lam and K. Wong, Automatic source camera identification using the intrinsic lens radial distortion, *Optics Express*, vol. 14(24), pp. 11551–11565, 2006.

[6] K. Choi, E. Lam and K. Wong, Source camera identification using footprints from lens aberration, *Proceedings of the SPIE*, vol. 6069, pp. 172–179, 2006.

[7] F. Devernay and O. Faugeras, Automatic calibration and removal of distortion from scenes of structured environments, *Proceedings of the SPIE*, vol. 2567, pp. 62–72, 1995.

[8] J. Fackrell and S. McLaughlin, Detecting nonlinearities in speech sounds using bi-coherence, *Proceedings of the Institute of Acoustics*, vol. 18(9), pp. 123–130, 1996.

[9] H. Farid, Blind inverse gamma correction, *IEEE Transactions on Image Processing*, vol. 10(10), pp. 1428–1433, 2001.

[10] H. Farid and A. Popescu, Blind removal of image non-linearities, *Proceedings of the Eighth International Conference on Computer Vision*, vol. 1, pp. 76–81, 2001.

[11] H. Farid and A. Popescu, Blind removal of lens distortion, *Journal of the Optical Society of America – A*, vol. 18(9), pp. 2072–2078, 2001.

[12] Z. Geradts, J. Bijhold, M. Kieft, K. Kurosawa, K. Kuroki and N. Saitoh, Methods for identification of images acquired with digital cameras, *Proceedings of the SPIE*, vol. 4232, pp. 505–512, 2001.

[13] C. Hsu, C. Chang and C. Lin, A Practical Guide to Support Vector Classification, Department of Computer Science and Information Engineering, National Taiwan University, Taipei, Taiwan (www.csie.ntu.edu.tw/∼cjlin/papers/guide/guide.pdf), 2008.

[14] N. Khanna, A. Mikkilineni, A. Martone, G. Ali, G. Chiu, J. Allebach and E. Delp, A survey of forensics characterization methods for physical devices, *Digital Investigation*, vol. 3(S1), pp. 17–18, 2006.

[15] M. Kharrazi, H. Sencar and N. Memon, Blind source camera identification, *Proceedings of the International Conference on Image Processing*, vol. 1, pp. 709–712, 2004.

[16] Y. Kim and E. Powers, Digital bispectral analysis and its applications to nonlinear wave interactions, *IEEE Transactions on Plasma Science*, vol. 7(2), pp. 120–131, 1979.

[17] J. Lukas, J. Fridrich and M. Goljan, Determining digital image origin using sensor imperfections, *Proceedings of the SPIE*, vol. 5685, pp. 249–260, 2005.

[18] J. Lukas, J. Fridrich and M. Goljan, Digital "bullet scratches" for images, *Proceedings of the International Conference on Image Processing*, vol. 3, pp. 65-68, 2005.

[19] J. Lukas, J. Fridrich and M. Goljan, Digital camera identification from sensor pattern noise, *IEEE Transactions on Information Forensics and Security*, vol. 1(2), pp. 205–214, 2005.

[20] S. Lyu and H. Farid, Detecting hidden messages using higher-order statistics and support vector machines, *Proceedings of the Fifth International Workshop on Information Hiding*, pp. 340–354, 2002.

[21] S. Lyu and H. Farid, How realistic is photorealistic? *IEEE Transactions on Signal Processing*, vol. 53(2-2), pp. 845–850, 2005.

[22] T. Ng and S. Chang, Passive-blind image forensics, in W. Zeng, H. Yu and C. Lin (Eds.), *Multimedia Security Technologies for Digital Rights*, Academic Press, New York, pp. 383–412, 2006.

[23] T. Ng, S. Chang and Q. Sun, Blind detection of photomontage using higher order statistics, *Proceedings of the International Symposium on Circuits and Systems*, vol. 5, pp. 688–691, 2004.

[24] P. Pudil, F. Ferri, J. Novovicova and J. Kittler, Floating search methods for feature selection with nonmonotonic criterion functions, *Proceedings of Twelfth IEEE International Conference on Pattern Recognition*, vol. 2, pp. 279–283, 1994.