9

The local management for a service control point

Tang Haitao, Esa Kärkkäinen***
Telecom Finland Ltd
Telecom Research Centre
P.O.BOX 145
FIN-00511 HELSINKI
FINLAND
*Telephone: *+358 2040 2513, **+358 2040 2990*

Abstract

Suitable local managers seem to be essential for increasing the performance, availability, and flexibility of the Service Control Point (SCP). In this paper, the main points of designing one local manager for an experimental SCP are introduced. The study shows the local manager is suitable for the purpose.

1 INTRODUCTION

A Service Control Point (SCP) is a key component in the Intelligent Network (IN). SCP works as a central server for customer services. Any problems in the SCP will greatly affect the performance of IN. Even if the hardware and software products used for IN would be more reliable in future, the environment of the SCP and other harmful factors will continue to threat its performance. Therefore, it is required to maintain the SCP with real time, full flexibility, and high efficiency to minimize the impact of failures on the system performance and to introduce quickly new services as well as change existing services. A local manager seems to be the solution to most of the requirements.

1.1 The SCP system and its local manager

The experimental SCP developed in Telecom Finland Ltd has the principal structure shown in figure 1 [1]. The SCP consists of two similar SCP-supporting systems, one active and the other passive at the time.

The SCP is implemented on an usual computer platform, which has an unix-like operating system. Each intelligent network service acts as an own service logic execution environment

J. Harju et al. (eds.), *Intelligent Networks*

(SLEE), which is a separate process in operating system. This makes it possible to have many different services in one machine. Services are also easier to manage because one service does not affect other services. Common commercial relational databases, like Sybase or Oracle, are used. Queries and updates from the services are centralized through the scheduler process. The scheduler is responsible for data integrity in the database. The SCP is connected to Service Switching Point (SSP).

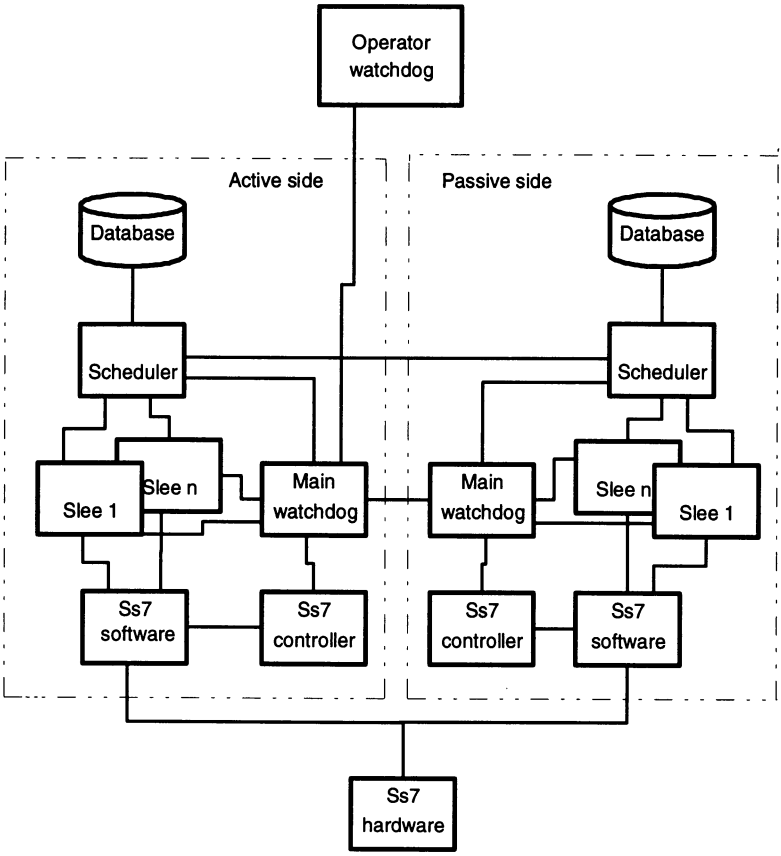

Figure 1.

The local manager inside the SCP is implemented with two main watchdogs and one operator watchdog. The local manager is used for maintaining the SCP and increasing its availability. It should be able to make automatically all parts of the SCP ready for the goal needed by the SCP.

The two main watchdogs connect each other and their information exchanging makes it possible for one of the SCP systems to be active and the other passive dynamically. The two main watchdogs decide together the roles of the two SCP systems.

The operator watchdog is mainly an interface between the SCP and SCP operator or other possible managers. The operator can control the SCP through this interface, even the local manager works independently and automatically. The reason for using this kind of operator watchdog is the need for the reliability, structure simpleness, and safety of the SCP.

From the system point of view, the local manager should also make it possible for the operator to introduce new services and change existing services quickly and without affecting other services in the SCP. The local manager is not a part of the real services in the SCP. From the efficiency point of view, it should not use system resources too much and be as simple and as reliable, as possible.

1.2 CVOPS

Local managers are built on CVOPS (C-based Virtual Operating System), which is a portable protocol development and run-time environment. CVOPS has been developed at Technical Research Center of Finland (VTT). The main reason for selecting CVOPS as a development tool for local managers is that CVOPS has been used successfully in other parts of the SCP.

The portability of CVOPS is based on a virtual operating system concept, which means that the operating system sees the whole CVOPS tool with all the protocol entities as a single process [2]. The protocol entities are implemented in different CVOPS tasks called vtasks. CVOPS provides FIFO (First in, First Out) scheduling and communication between the vtasks in a same process.

CVOPS gives basic framework to build an application and also several support services for developer. Logic actions are described as an extended finite state automaton (EFSA). CVOPS can work in many operating systems. If applications use only CVOPS services, they are portable to the operating systems too.

2 DESCRIPTION OF THE LOCAL MANAGEMENT

The operator watchdog and the main watchdog are the important parts of the local management. The operator watchdog acts as a manager for the SCP, since the operator watchdog sends certain requests to the main watchdog and receives event messages from the main watchdog. The operator watchdog can also act as an agent for another network manager. The main watchdog is an agent for the operator watchdog and a manager for all other parts in the SCP system. It can send certain requests to any part of the SCP system and receive events. Two main watchdogs are a limited agent and manager for each other at the same time. Their structure, working logic, and functions are essential for the performance and the extendibility of the SCP as a whole.

2.1 The protocol of the local manager

The protocol used in the local manager is a special one, which is not any of the standard protocols like Simple Network Management Protocol (SNMP). The reason for using the special protocol is that it is simple and efficient enough for the local management case. The simplified message structure of this protocol is shown in figure 2.

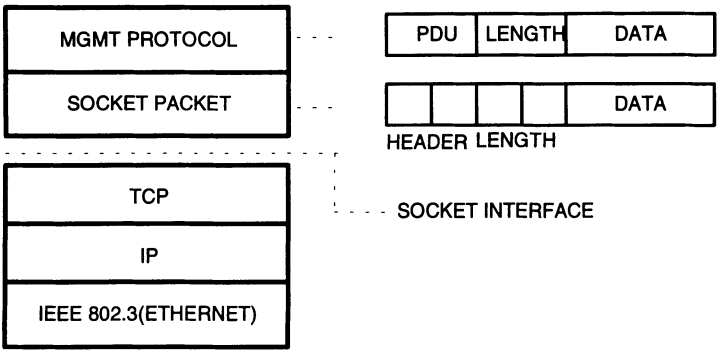

Figure 2.

2.2 The internal structure of the main watchdog

Figure 3 shows the internal structure of the main watchdog.

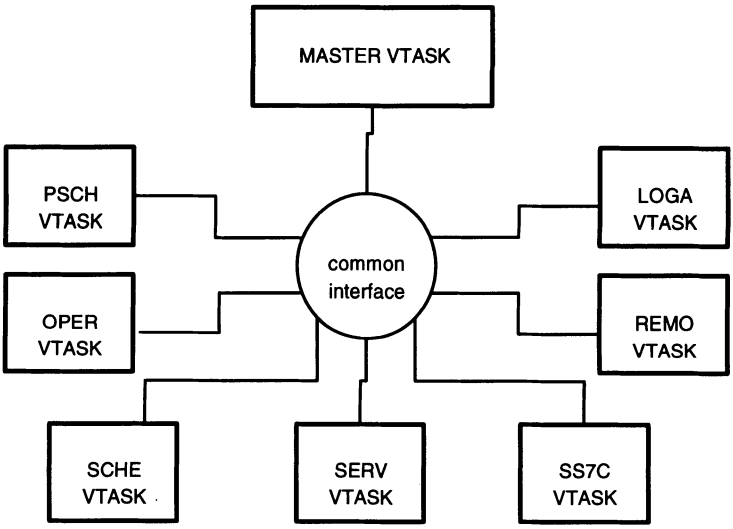

Figure 3.

The master vtask implements the control logic of the main watchdog. The slave vtasks can gather information and execute actions. All the vtasks have a common interface with each other and share common information. By this way, the structure of centralized controlling and distributed message processing is built up. One advantage of using this structure is that the overall logic is clear and the function groups are relatively independent. It is like using simple

blocks to build a complex one. Another advantage is its flexibility, it means one can add new function group or modify the existing function groups without affecting the other parts too much.

Table 1. Main functions built in each vtask

Vtask	Managed part
master	global decisions
remo	Connection with the main watchdog at the other side
ss7c	Signalling System number 7 (ss7)
serv	Slees
sche	Scheduler and databases
oper	Connection with the operator watchdog
loga	Logging
psch	Checking and killing processes.

One very important thing for designing the main watchdog is the way of making certain decision from the asynchronous events gathered into the main watchdog [3]. To do this, one global data structure and certain algorithm for correlating the asynchronous events are used. The principle is shown in figure 4. It is better to use the following simple example to interpret it.

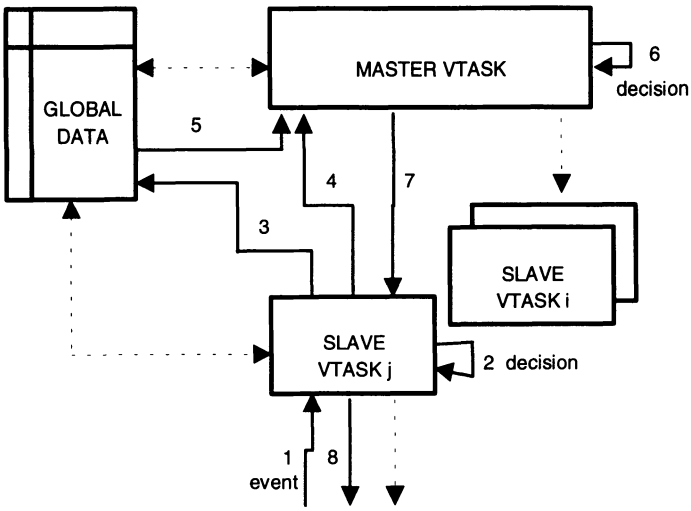

Figure 4. The numbering means the order of actions.

When some event comes, a slave vtask will make local decision and update the global data. Then, it will inform master vtask about this event. When master vtask receives this event, it

will make a certain decision and give a certain action command to the slave vtask or other slave vtask(s). In turn, the slave vtask or other slave vtask(s) will execute the command.

2.3 The functions given by the main watchdog

Table 2. The offered services by main watchdog to the SCP

Service	Actions
starting	Start the system
maintaining	Keep the system alive
closing	Stop the system gracefully
switch over	Move services from one side to another side
interacting	Exchange information with the operator watchdog.

When the main watchdog has been in maintaining state, it keeps checking its own and the other side of the SCP system according to its negotiated role. If the main watchdog finds something wrong, it will try to fix the problem. Sometimes, it will go through switching over. There are two kinds of switch over cases, normal switch over and immediate switch over. If the main watchdog goes on normal switch over, it will first check if the other side is able to accept the possible active role. If the answer is YES, the main watchdog goes on closing and then, with the finishing of closing, this main watchdog informs the other side to take over service. If the main watchdog has to choose immediate switch over, it will inform the other side to take over service role or be active itself immediately.

In closing, main watchdog will go through the system shut down, which includes shut down of the slee(s), deactivating the ss7, and shut down of the scheduler. The main watchdog will also inform the other side to take over the service.

It is also important for the main watchdog to support the interactions between the SCP system and an operator or other managers. There is no any direct connection between the service stack of the SCP and the operator or other managers. The SCP may need certain information from the operator or other managers. For this reason, the main watchdog has to serve as a coordinator between them too.

2.4 The operator watchdog

As an interface between an operator and main watchdogs, the operator watchdog gives a way for them to control the main watchdog and other SCP parts by the following services:

Table 3. The offered services by main watchdog to the operator

Service	Actions
connecting	connect to the main watchdog
disconnecting	disconnect from the main watchdog
shut down	shut down one side or both sides
look	look the running situation of the SCP
change log	change the log of the scheduler, the slee,or the main watchdog

start	start any of the slees
stop	stop any of the slees
reset	let the slee to read its configuration

If one looks the local manager as a part of Telecommunication Management Network (TMN), the principal structure is shown in figure 5.

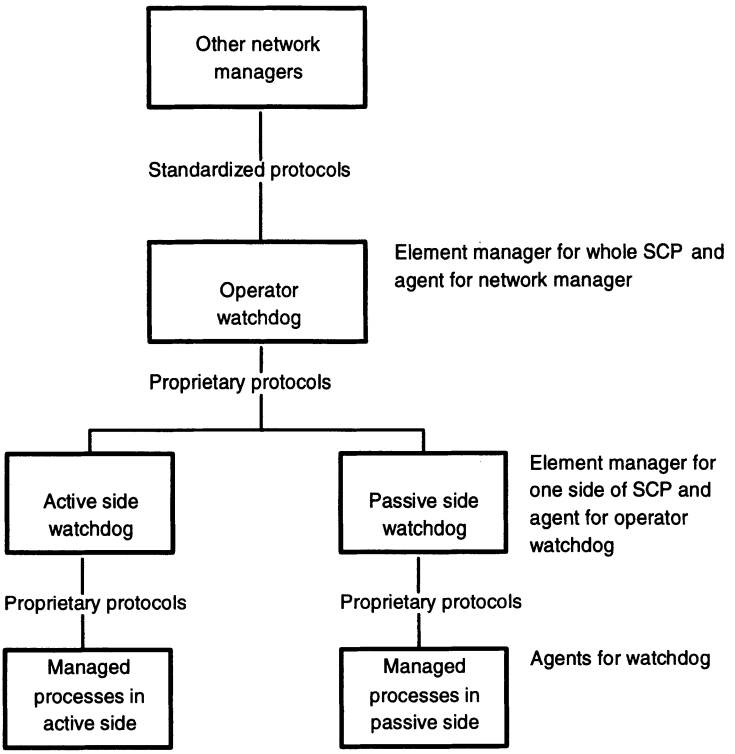

Figure 5.

A remote manager can connect to the operator watchdog. The remote manager may use some standard management protocol like CMIP (Common Management Information Protocol) or SNMP. The operator watchdog can act as a protocol converter, which translates messages between the remote manager and the SCP. The protocol itself is not enough since the remote manager and the managed process must have common understanding of the managed data.

In principle, TCP/IP (Transmission Control Protocol/Internet Protocol) -network, SS7 (Signalling System number 7) -network or X.25 network can be chosen for remote control. SS7 network is already used for the connection with SSP, but it is expensive and quite difficult to use. The application programming interface (API) for SS7 is not standardized. In contrast, the support for TCP/IP network is included in almost every unix operating system and the API

is standardized as sockets. Furthermore, TCP/IP hardware is cheap. Currently, X.25 is not used in this SCP. For these reasons, TCP/IP-based management seems to be natural. Because SNMP is in wide use for TCP/IP networks, SNMP seams to be more natural choice than CMIP for this SCP management.

Protocol conversation is needed because it is not useful to use complex network management protocols inside the SCP. Simple and efficient enough protocols are suitable to be inside the SCP. The operator watchdog can be situated in a separate machine to remove protocol conversation load from the service machines.

2.5 The mib for the local manager

The MIB of the local manager is limited and special in its information scale. The principal structure is shown in figure 6.

```
SCP
|
|__ SYSTEM 1
|    |
|    |__ MAIN WATCHDOG
|    |
|    |__ DATABASE
|    |
|    |__ SCHEDULER
|    |
|    |__ SLEE 1
|    |
|    | ...
|    |__ SLEE n
|    |
|    |__ SS7 SOFTWARE
|
|__ SYSTEM 2
     |
     |__ ( same as those under system 1 )
```

Figure 6.

Table 4. The attributes of the SCP object

Name	Type	Access	Status
scpStatus	ScpStatus	Read-only	Mandatory

scpStatus has values (not started, starting, single, double, going double, going single, not OK, going down, unknown)

Table 5. The attributes for the system object

Name	Type	Access	Status
systemStatus	SystemStatus	Read-only	Mandatory

systemStatus has values (not started, OK, not OK, active, passive)

Table 6. The attributes for the main watchdog object

Name	Type	Access	Status
wdStatus	WdStatus	Read-only	Mandatory
wdToScheduler	ConnectionStatus	Read-only	Mandatory
wdToSlee1	ConnectionStatus	Read-only	Mandatory
...			
wdToSleeN	ConnectionStatus	Read-only	Mandatory
wdToSs7	ConnectionStatus	Read-only	Mandatory
wdToOtherWd	ConnectionStatus	Read-only	Mandatory
Go down	BOOLEAN	Write-only	Mandatory
Ask report	BOOLEAN	Write-only	Mandatory
Logging level	Integer (1..5)	Write-only	Mandatory
Change log	BOOLEAN	Write-only	Mandatory
Read configuration	BOOLEAN	Write-only	Mandatory
Trouble report	ANY	Read-only	Optional
Report ready	ANY	Read-only	Optional

WdStatus has values (not started, OK, not OK), ConnectionStatus has values (not connected, connected)

Table 7. The attributes for the SLEE object

Name	Type	Access	Status
Slee identification	Integer (0..255)	Read-only	Mandatory
sleeStatus	SleeStatus	Read-only	Mandatory
sleeConnectivity	SleeConnectivity	Read-only	Mandatory
Connect to scheduler	BOOLEAN	Write-only	Mandatory
Connect to ss7	BOOLEAN	Write-only	Mandatory

Go down	BOOLEAN	Write-only	Mandatory
Ask report	BOOLEAN	Write-only	Mandatory
Logging level	Integer (1..5)	Write-only	Mandatory
Read configuration	BOOLEAN	Write-only	Mandatory
Trouble report	ANY	Read-only	Optional
Report ready	ANY	Read-only	Optional

SleeStatus has values (not started, OK, not OK, overload, down ready), SleeConnectivity has values (not connected, connected to scheduler, connected to ss7, connected to scheduler and ss7)

Table 8. The attributes for the scheduler object

Name	Type	Access	Status
schedulerStatus	SchedulerStatus	Read-only	Mandatory
scheConnectivity	ScheConnectivity	Read-only	Mandatory
Connect to local db	BOOLEAN	Write-only	Mandatory
Connect to remote db	BOOLEAN	Write-only	Mandatory
Go down	BOOLEAN	Write-only	Mandatory
Change log	BOOLEAN	Write-only	Mandatory

SchedulerStatus has values (not started, OK, not OK, down ready), ScheConnectivity has values (not connected, connected to local db,connected to remote db, connected to both dbs)

Table 9. The attributes for the ss7 object

Name	Type	Access	Status
ss7Status	Ss7Status	Read-only	Mandatory
Connect to ss7	BOOLEAN	Write-only	Mandatory
Disconnect to ss7	BOOLEAN	Write-only	Mandatory
Activate	BOOLEAN	Write-only	Mandatory
Deactivate	BOOLEAN	Write-only	Mandatory

Ss7Status has values (not started, active, passive, unknown, not OK).

3 CONCLUSION

The local manager is designed for the experimental SCP and has proved to be successful for the goal. With some modifications, it could used in the SCP product.

4 REFERENCES

[1] Kärkkäinen E. Telen SCP. Seminar work, Lappeenranta University of Technology. 1994.

[2] CVOPS User's Guide. Version 1.1, Technical Report, Technical Research Centre of Finland, 1991.

[3] Jakobson G. and Weissman M. Alarm Correlation. IEEE NETWORK MAGAZINE. November 1993. pp 52-59.